TABLE OF CONTENTS

- **Before Getting Started…….…… 2**
- **Exhibition Overview Chart……..….. 4**
- **Unpacking and Installation....…….… 5**
    - **Free-Standing Panels……..…….…….. 6**
    - **AV Kiosks…… 10**
        - Kiosk Setup…….……. **11**
        - Troubleshooting……... **13**
- **Maintenance and Care…… 14**
- **De-installation and Packing…… 15**
- **Transportation Guidelines for Audio Visual Kiosks…… 18**

BEFORE GETTING STARTED

Labor Requirements (estimated):

- **Unloading the Truck:**
  - At least 2 (two) workers to unload the truck.
  - It should take approximately 1 (one) hour.
  - There are 24 crates total numbered **1-4** and **7-26***, all equipped with wheels for easy transport.
    - 13 standard size (32" x 43" x 12", approximately 115lbs each)
    - 7 accessory size (16.5" x 29.5" x 10", approximately 45lbs each)
    - 4 kiosk crates (66 1/8" x 26 7/8" x 30 3/4" high, approximately 175 lbs each)
    - Miscellaneous small cardboard boxes containing brochures and optional cloth banners will also be included.

    ***There are no crates numbered 5 or 6**
- **Installation:**
  - At least 2 (two) workers will be needed, but 4 (four) are recommended.
  - It should take no more than 1 (one) day to install the exhibition.
- **De-installation:**
  - At least 2 (two) workers will be needed.
  - Preferably the same workers who installed the exhibition.
  - It should take no more than 2 (two) to 3 (three) hours.
- **Loading the Truck:**
  - At least 2 (two) workers to load the truck.
  - It should take approximately 1 (one) hour.

Tools and Equipment:

- **4'-6' Step Ladder** (to connect header panels)
- **Extension Cords** (may be required depending on the placement of the audio visual elements)
- **Power Strips** (may be required depending on the placement of the audio visual elements. Please note: AV equipment have internal surge protectors and must therefore not be connected to any external surge protectors.)
- **OSHA Approved Cord Molding/Duct Tape** (we recommend this to secure and protect the electrical cords that may need to run across the exhibition space)

Layout Space Information:

- The exhibition is a series of free-standing panels that can be assembled in a variety of configurations to best fit your space.

Sample Installation Photos:

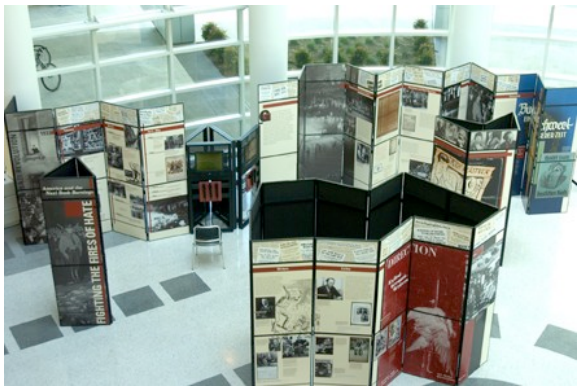

Norick Library, Oklahoma City, OK

Denver Public Library, Denver, CO

National World War II Museum, New Orleans, LA

EXHIBITION OVERVIEW CHART

Crates	Panel and Header #s	Section Title	Configuration (# of connected panels)	Panel #s
1	AV Kiosk	Students in the Nazi Revolution	Free-standing Kiosk	Place near #9
2	AV Kiosk	Immediate American Responses	Free-standing Kiosk	Place near #27-28
3	AV Kiosk	America at War	Free-standing Kiosk	Place Near #39-40
4	AV Kiosk	Recurring Symbol	Free-standing Kiosk	Place Near #58-59

Please note there are no crates 5 or 6

7	1-3 (a, b, c)	Title Kiosk	3 panels	1-3
8	4-8 (b, c)	The Nazi Revolution	5 panels	4-8
9	4-8 (a)	The Nazi Revolution ***Open First: Condition report book, installation manual, brochure holders**		4-8
10	9-13 (b, c)	Students in the Nazi Revolution	5 panels	9-13
11	9-13 (a)	Students in the Nazi Revolution		9-13
12	14-19 (b, c)	Students in the Nazi Revolution	6 panels	14-19
13	14-19 (a)	Students in the Nazi Revolution		14-19
14	20-24 (b, c)	Authors and Their Books	5 panels	20-24
15	20-24 (a)	Authors and Their Books		20-24
16	25-28 (a, b, c)	Immediate American Responses	4 panels	25-28
17	29-32 (a, b, c)	Immediate American Responses/American Press/ Writers	4 panels	29-32
18	33-36 (a, b, c)	Immediate American Responses	4 panels	33-36
19	37-41 (b, c)	America at War	5 panels	37-41
20	37-41 (a)	America at War		37-41
21	42-47 (b, c)	America at War	6 panels	42-47
22	42-47 (a)	America at War		42-47
23	48-51 (a, b, c)	America at War	4 panels	48-51
24	52-55 (a, b, c)	The Recurring Symbol	4 panels	52-55
25	56-60 (b, c)	The Recurring Symbol	5 panels	56-60
26	56-60 (a)	The Recurring Symbol		56-60

UNPACKING AND INSTALLATION

Free-standing Panels:

- The standard size crates contain exhibition panel structures.
- Each set of accordion-style panel systems is a set of 3, 4, 5, or 6 connected panels (as indicated in the configuration column of the Exhibition Overview Chart on page 4).
- Each fully assembled panel system, as identified below, has three inset pieces.
  - The lower 2 (two) pieces are parts **B** and **C**, and they do not disassemble (only fold down for storage).
  - The third piece, part **A**, is separate from these and must be attached on top as an individual piece (see drawings below).
- The crates do not need to be opened in any specific order, but we **recommend** placing the crates in the general area of the room where that portion of the exhibition will be displayed before opening and unpacking each crate.
- All panels are numbered sequentially, starting with crate 7, to match the desired flow of the exhibition content as outlined in the Exhibition Overview Chart on page 4. The title kiosk, however, can be placed wherever seems most appropriate to the space.

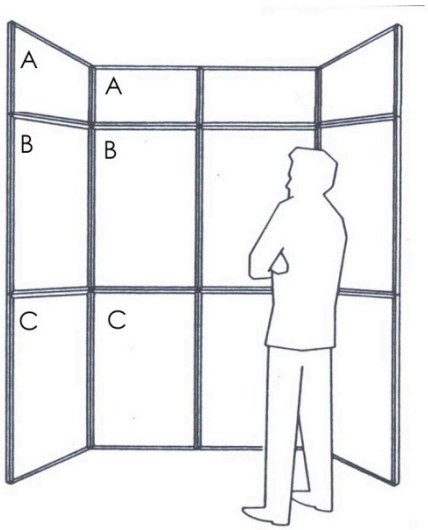

***A fully assembled and installed panel system.**

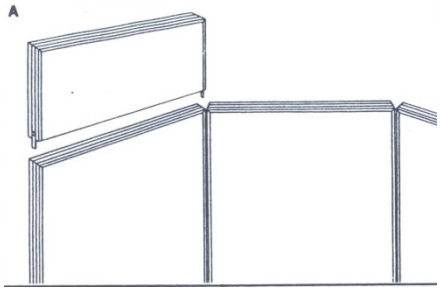

***Attaching part A on top of B and C.**

Unpacking:

1. Open each crate by detaching the straps and removing the lid.

2. Remove contents, retaining the cardboard for repacking. To remove panels, lift up from the attached velcro strap for assistance.
    a. If the crate contains the header panel (part **A**) set aside until the main exhibition component has been assembled (see instructions for attaching header panels on page 9).

3. Set each unit down with the pivot hinge on top.

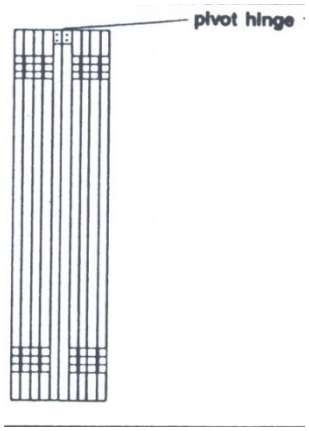

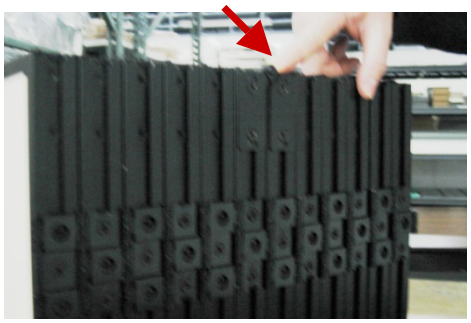

4. Remove velcro strap and return it to the crate for repacking.

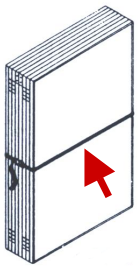

5. Separate each unit at the pivot hinge creating an inverted “v” shape.

6. Un-fold unit by lifting half of the lower portion to an upright position.

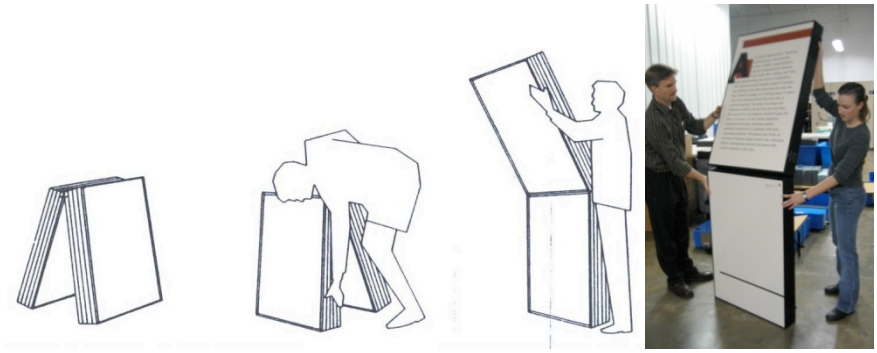

7. Use the simple locking device to secure panels by sliding the plate between the seams of panels **B** and **C**, and turning the screws until tight.

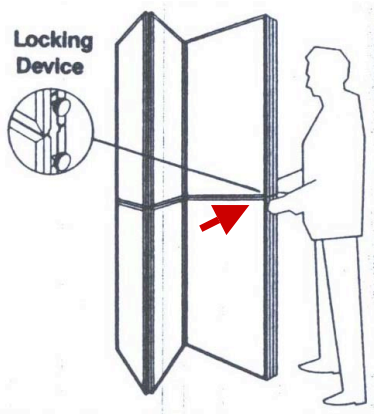

8. Pull out folds to fully open panel system. The panels can be arranged in any curved or zigzag manner, but cannot be in straight linear forms.

Header Panels:

- The accessory size crates will only contain panel type **A** (header panels).
  1. Open each crate by detaching the straps, and lift the top straight up. Retain cardboard for repacking.

  2. Remove contents and prepare to install.

  3. Attaching header panels:
     a. Attach header panels (**A** panels) by matching the number on the reverse of each panel to the corresponding number on the reverse of the **B** and **C** panels.

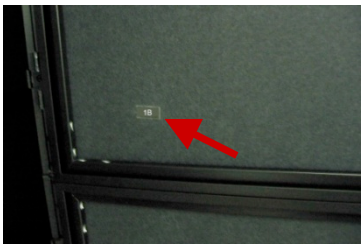

     b. Slide bayonets into the slots located on top of the **B** panels. We recommend using a step stool or ladder.

Audio Visual Crates:

- **Important:** The kiosks and their crates will require 2 (two) people to move them.

Uncrating/Unpacking the Crates:

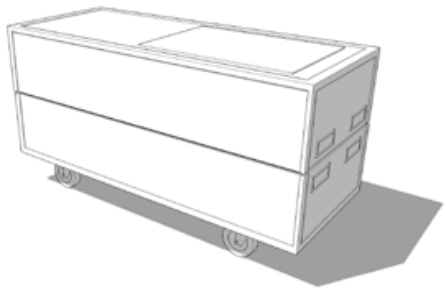

Step 1: The crates will have combination locks affixed to them with the universal combination number 0-0-0-3. Unlatch the four latches on the crate (2 on each long side of the crate). This is done by lifting the metal tab and turning it counterclockwise to release the latch.

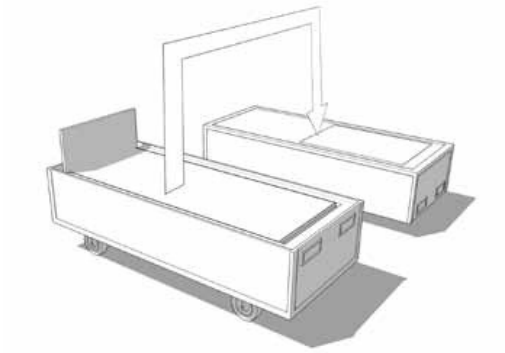

Step 2: With one person at each short end of the crate, grab the top set of handles and lift the lid straight up until the lid has cleared the base of the kiosk. Then gently place the lid on the floor several feet to the side of the kiosk with the latched side resting on the ground.

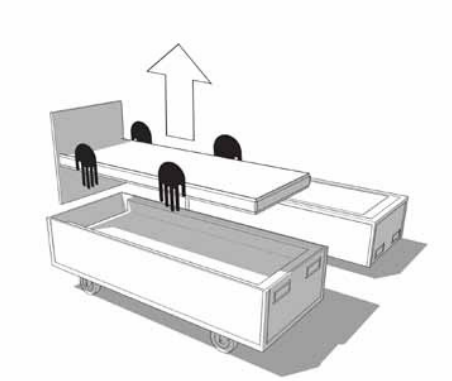

Step 3: Locate the power cord and pull it out of the body of the crate and gently rest it on top of the kiosks. With one person at each long side of the crate, reach your hands down under the sides of the kiosk and lift the kiosk out. **It is important to note that the kiosk is heavier at the base than at the top.**

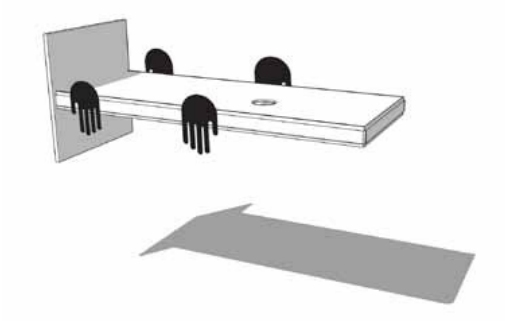

Step 4: Slowly walk the kiosk over the case and to its desired location, be careful not to trip over the cord.

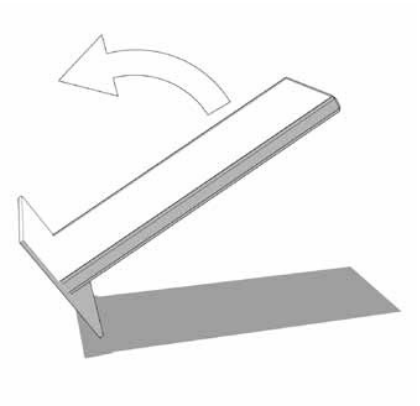

Step 5: Gently lower the base end of the kiosk to the ground and slowly stand the kiosk up in its desired location.

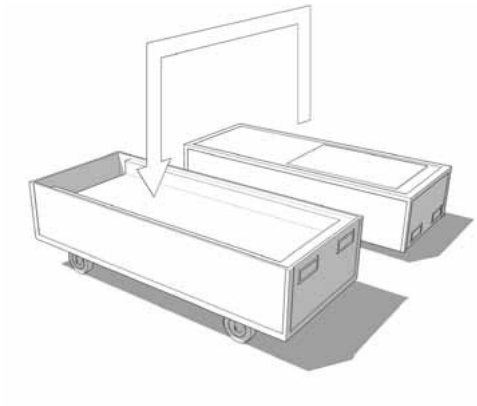

Step 6: Replace the lid onto the crate. Re-latch the lids by placing the bottom portion of the latch over the metal lip on the lid side of the latch. Then turn the metal tab clockwise until it stops and fold the latch into the recess.

Kiosk Set Up:

1. Using 2 (two) people, place the kiosk in the appropriate location as per the Exhibition Overview Chart on page 4.
2. Plug the unit into a standard 110 volt 3 prong outlet. It is important **not** to plug the unit into a **surge protector/power strip** as it may conflict with the kiosk's built-in surge suppression. The use of a **black 3 prong extension cord** is preferred.
3. After plugging the unit in, the kiosk will begin to power on. There is **no external power switch or button to activate**; the unit will turn on when plugged in. The start up process can take **several minutes** so do not be alarmed if the unit does not immediately turn on or if the screen indicates that there is no video signal — this is normal during the start up process.
4. Once the kiosk is plugged in and running (approximately 2-3 minutes) a still image should appear on screen. This image is the idle state for the screen. Once this screen is visible simply **touch** the screen to begin the A/V program. Once the program starts you can simply touch the screen again to stop it. This process insures that the video is working properly.
5. You are now finished with the setup of the kiosk.

- **Adjusting the Volume:**

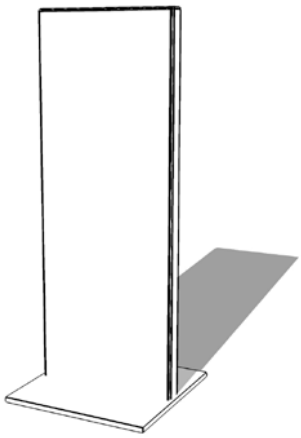

Step 1: Move around to the rear of the Kiosk

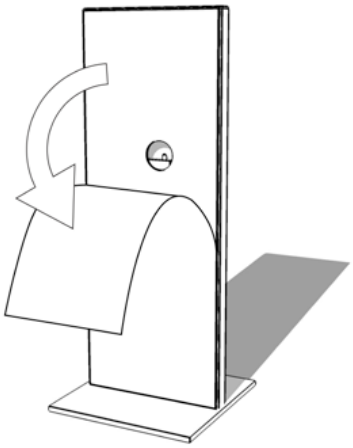

Step 2: Begin by peeling the graphic off the back. Starting at the top and inserting a credit or card or similar flat object at the edge of the graphic will help you to start peeling it away from the kiosk. You will only need to peel the graphic halfway down for this process.

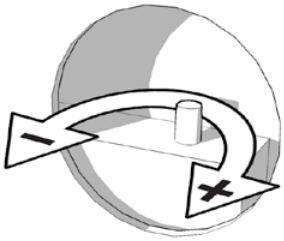

Step 3: Locate the volume control located in the circular opening behind the graphic. Turning the knob counter clockwise reduces the volume and turning the knob clockwise increases the volume. Set the volume to the desired level.

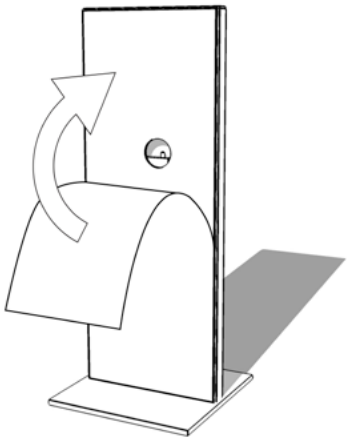

Step 4: Reattach the graphic. You have now adjusted the volume.

- **General Troubleshooting for Kiosks:**
  - **Remember to give the kiosk 2-3 minutes after plugging it in to insure that it is fully functioning.**
    1. Insure that there is power to the outlet that is being used. Try a different outlet and see if the unit works properly.
    2. Assess the problem — what is and isn't working on the kiosk? Even if there is no video on the screen, try to touch the screen and see if the audio will play for the video. This will help narrow the list of possible issues.
    3. With the kiosk still plugged into the wall, remove the back panel of the kiosk as illustrated in the section "Switching SD cards" in the KFR Manual.
    4. Make sure that the switch on the surge protector is on the "on" or "reset" position. If the switch was in the "off" position, then switch the device to the "on" or "reset" position. Then inspect the kiosk and determine if it is now operating normally, keep in mind it may take 2-3 minutes for the kiosk to start up.
    5. **If you are unable to resolve the issues or if you require further assistance please call: USHMM Traveling Exhibitions (202) 314-0325.**

MAINTENANCE AND CARE

- **Free-standing Panels:**
  - This exhibition was designed to be care-free. However; the surfaces may require cleaning at times.
  - All exhibition components, including the structures themselves can be cleaned with a normal glass cleaner.
  - **Do not apply cleaner directly onto the panels**, but rather apply cleaner to a paper towel or cloth and then use it to clean the glass and/or panels.

- **Audio Visual Kiosks:**
  - **Powering on and off:**
    - There are no external power controls for the kiosk. Simply plug the unit in at the beginning of the day and unplug it after public hours. To help extend the service life of the kiosk, please unplug it when the exhibition is closed to the public.
  - **Handling:**
    - Although the kiosk was designed with durability in mind it does still contain sensitive electronics that can be damaged by impact and mishandling. Care should always be taken when moving, loading, and transporting the kiosk. It is also important to avoid touching the surface of the screen with any hard or abrasive materials to reduce the chance of scratching the surface of the screen.
  - **Environment:**
    - Do not expose the kiosk to extreme temperatures or humidity. The kiosk is designed for indoor applications only and should never be exposed to the elements.
  - **Cleaning:**
    - **Before cleaning the kiosk's cabinet or screen it is important to unplug the system to reduce the risk of electrical shock.** To clean the touchscreen, use window or glass cleaner. **Put the cleaner on the rag and wipe the touchscreen. Never apply the cleaner directly on the touchscreen.**
    - To clean the display unit cabinet and printed graphic panels, use a cloth lightly dampened with a mild detergent.

- **Report Damage:**
  - If any serious damage occurs or is noticed, please **do not** attempt to make any repairs yourself. **Please report any damage or malfunction immediately to the United States Holocaust Memorial Museum Traveling Exhibitions Department:**

    Phone: 202-314-0325.
    Email: Traveling@ushmm.org

DE-INSTALLATION AND PACKING

- **Free-standing Panels:**
  1. Remove part **A** (header).
  2. Unlock and fold down all panel systems.

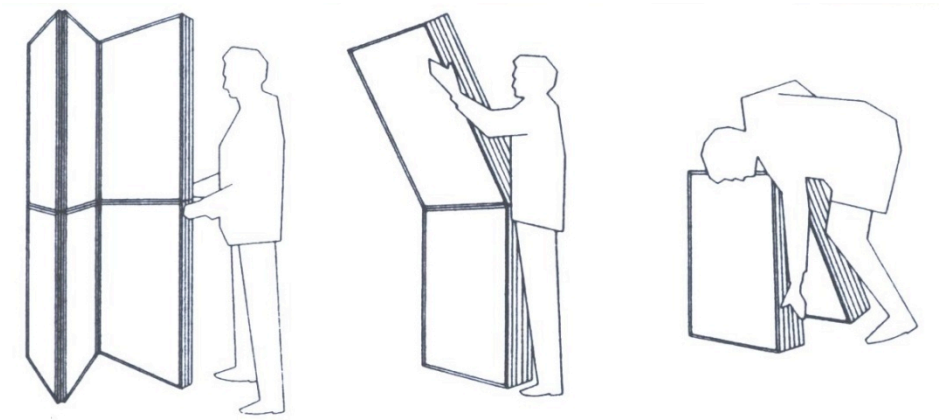

3. Reattach velcro strap, and return folded units to their crates as labeled. **Make sure a piece of cardboard remains between each layer.**

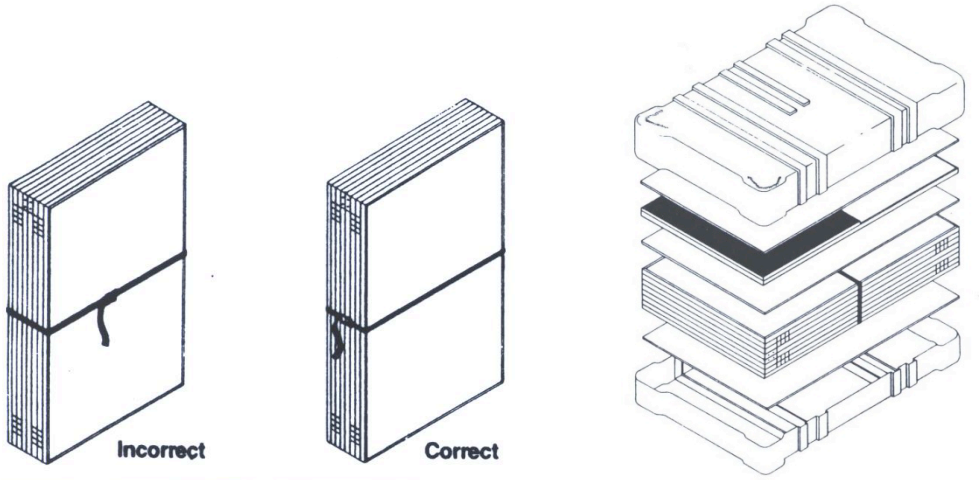

4. Secure strapping on outside of crates.

5. Return each AV kiosk to their crates as labeled (see page 4).

- **Audio Visual Kiosks:**

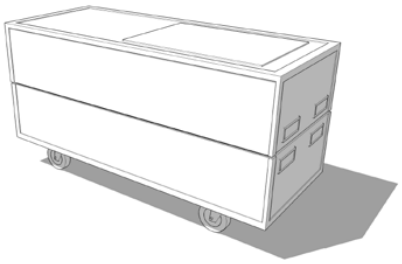

Step 1: The crates will have combination locks affixed to them with the universal combination number 0-0-0-3. Unlatch the four latches on the crate (2 on each long side of the crate). This is done by lifting the metal tab and turning it counterclockwise to release the latch.

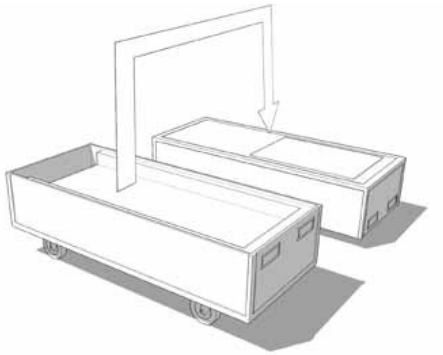

Step 2: With one person at each end of the the crate, grab the top set of handles and lift the lid. Then gently place the lid on the floor several feet to the side of the kiosk with the latched side resting on the ground.

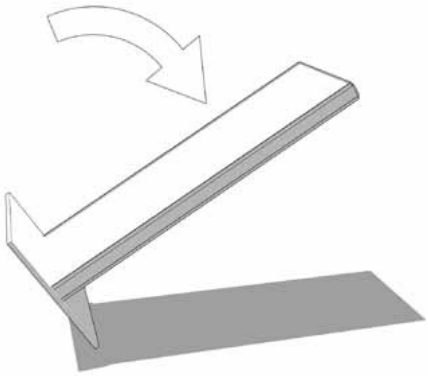

Step 3: With one person at each side of the kiosk, begin to tilt the kiosk- screen side down until the kiosk is parallel with the ground.

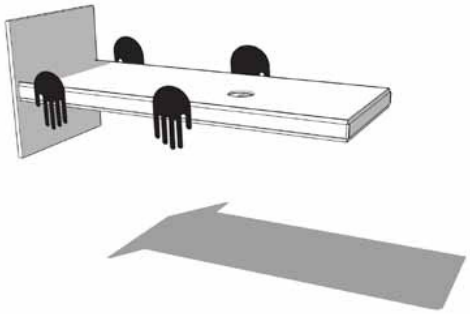

Step 4: Slowly walk the kiosk over to the case (**screen side down**), be careful not to trip over the power cord.

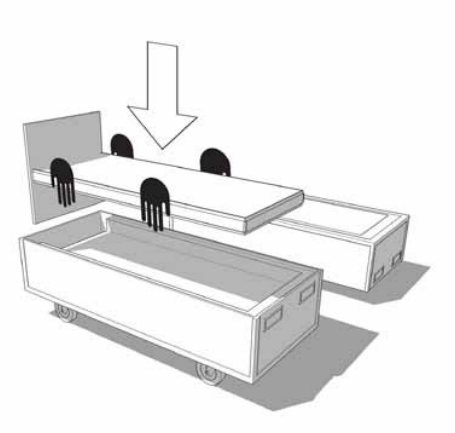

Step 5: Once over the crate, align the base plate with the slow at the bottom of the crate. Then slowly lower the kiosk (**SCREEN SIDE DOWN**) straight down into the case. **It is important to note that the kiosk must be level when being lowered into the crate.** If the kiosk is not level the base plate will not slide into its slow. Once the kiosk is nestled into the foam, drop the power cord down into the case opening between the side of the case and the side of the kiosk.

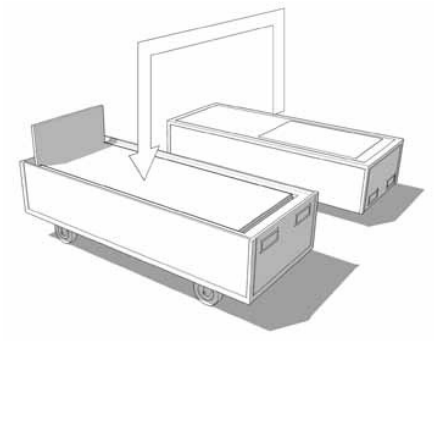

Step 6: Replace the lid onto the crate. Take notice of the orientation of the lid. The lid **must be placed so the crate label is oriented over the top portion of the kiosk (the back of where the monitor is located). Close the** four latches on the crate (2 on each long side of the crate). This is done by hooking the lower portion of the latch onto the lid-side bracket. Then turn the metal tab clockwise until it stops and fold the tab sown into the recess. Re-attach the combination lock(s).

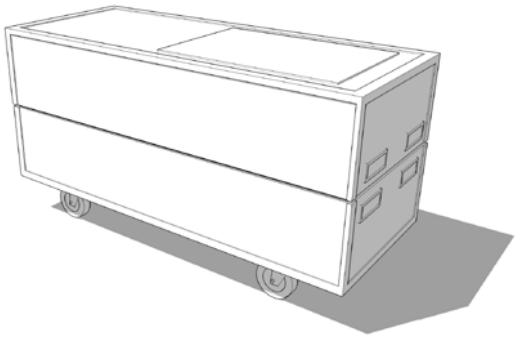

Step 7: Store the crates in an area away from extreme temperatures and humidity until loaded for transportation.

TRANSPORTATION GUIDELINES FOR AUDIO VISUAL KIOSKS

- The lid **MUST** be attached so the crate label is oriented over the top portion of the kiosk (where the back of the monitor is located).
- Even though the cases are fitted with castors it is important to have 2 (two) people working together to roll the cases around and lift the case over short obstacles (i.e. Curbs, door jams, carpet transitions).
- If the case must be lifted by hand it is important that all lifting be done by the bottom set of handles, not the set of handles attached to the lid.
- When placing the cases into and out of the transportation vehicle use either a lift-gate, ramp, or vehicle height loading dock. It is **not recommended** to manually lift the cases in and out of the truck. If the case must be lifted it is best to be done with **4 (four) people**, one at each corner of the case.
- The cases can **ONLY** be shipped on either their casters or stood on end. If the cases are stood on end they must be oriented per the labels instructions
- **THE CASES MUST BE SECURED INSIDE OF THE SHIPPING VEHICLE**, failure to do so can cause damage to both the shipping case and the kiosk inside.
- The case must not be free to roll or to tip over. It is also important that other materials in the truck can not impact the shipping cases during loading/unloading or under transit.

USHMM CONTACT INFORMATION

Phone: 202-314-0325.
Email: Traveling@ushmm.org